ODSL 30 — Optical laser distance sensors

Part No. 501 08371

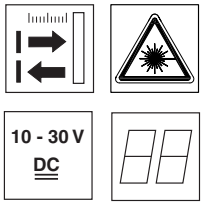

0.2 … 30 m

- Reflection-independent distance information
- High accuracy through referencing
- RS 232 interface
- 2 teachable switching outputs
- LC display and key pad for configuration
- Measurement value is indicated in mm on LC display
- M12 connector
- Mounting device included
- Connection option for a coupling module, e.g. for Profibus

Accessories:

(available separately)

- Ready-made cable K-D M12A-8P-2m-PUR
- Co-operative Target CTS 100x100 (reflectivity 50 … 90%)

Dimensioned drawing

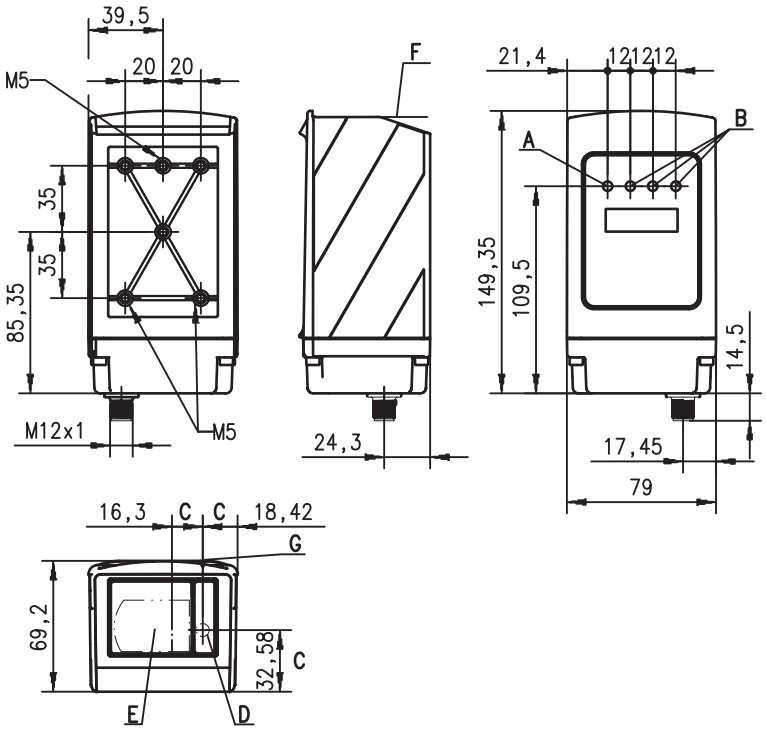

A 1 green indicator diode / ready
B 3 yellow indicator diodes / switching outputs Q1, Q2, Q3
C Optical axes
D Transmitter
E Receiver
F Reference edge for the measurement (distance zero point)
G Sight for coarse alignment

Electrical connection

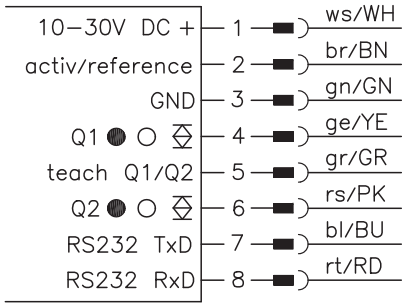

We reserve the right to make changes • ods_16gb.fm

Specifications

Optical data	
Measurement range [1)]	0.2 … 30 m [1b)]
Resolution [2)]	0.1 mm/1 mm (factory setting)
Light source	laser
Wavelength	650 nm (visible red light)
Light spot	divergent, ∅ 6 mm at 10 m
Laser warning notice	see remarks
Error limits [3)]	
Absolute measurement accuracy [1)]	± 5 mm (6 … 90% diffuse reflection) ± 2 mm (90% diffuse reflection) after referencing
Repeatability [4)]	± 2 mm (6 … 90% diffuse reflection)
Temperature drift	typ. 0.5 mm/°C (without referencing)
Timing	
Measurement time [5)]	30 … 100 ms (factory setting: 100 ms)
Delay before start-up	≤ 1 s
Electrical data	
Operating voltage U_B	10 … 30 VDC (incl. residual ripple)
Residual ripple	≤ 15% of U_B
Power consumption	≤4 W
Switching outputs	PNP transistor, HIGH active (default), NPN transistor or push-pull through configuration
Signal voltage high/low	≥ (U_B-2 V)/≤ 2 V
Serial interface	RS 232, 9600 Baud default setting
Indicators	
Green LED continuous light	ready
Green LED off	no voltage
Yellow LED continuous light	object inside teach-in measurement distance
Yellow LED off	object outside teach-in measurement distance
Mechanical data	
Housing	metal
Optics cover	glass
Weight	650 g
Connection type	M12 connector, 8-pin
Environmental data	
Ambient temp. (operation/storage)	-10°C … +45°C / -40°C … +70°C
Protective circuit [6)]	2, 3
VDE safety class [7)]	II, all-insulated
Protection class	IP 67
Laser class	2 (acc. to EN 60825-1)
Standards applied	IEC 60947-5-2

1) Luminosity coefficient 6% … 90%, temperature range 0°C … +45°C
1b) ODSL 30/D… up to 65 m, luminosity coefficient 50% … 90%
2) Display and output resolution 0.1 mm configurable
3) In the temperature range of 0°C … +45°C, measurement object ≥ 50x50 mm²; at temperatures < 0°C different error limits apply
4) Same object, identical environmental conditions
5) Configurable, depends on the reflectivity of the object and on the max. detection range
6) 2=polarity reversal protection, 3=short-circuit protection for all outputs
7) Rating voltage 250 VAC

Approved purpose:
The ODSL 30 distance sensors are optical electronic sensors for the optical, contactless measurement of distance to objects.

Example 1: ASCII transmission of the measurement value

Transmission format: **MMMMM<CR>**
MMMMM = 5-digit measurement value
<CR> = ASCII character "Carriage Return" (x0D)

Example 2: measurement value = 16 Bit

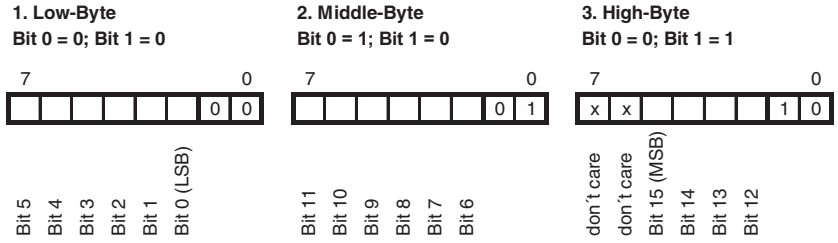

Order guide

	Designation	Part No.
With M12 connector	ODSL 30/D 232-30M-S12	500 41203

Remarks

- **Measurement time:** configurable, depends on the reflectivity of the object and on the measurement mode.
- **Teaching procedure (factory setting):** Position measurement object at the desired measurement distance. Apply +U_B to the teach input. Take teach input back to GND, switching output has now been taught. First edge on line **teach Q1/ Q2** teaches output Q1, second edge teaches Q2. During the teaching of Q1, the yellow LED Q1 will flash. During the teaching of Q2, the yellow LED Q2 will flash.
- **Activation/referencing input:** Referencing is carried out by applying the voltage (for a duration of about 300 ms). If this process is activated before the measurement, the highest possible accuracy is achieved.
- Possible protocols for the serial interface, selectable through configuration.
  1. Distance output in ASCII

  2. Measurement value=14/16/ 20 bit (measurement distance up to 15000 mm at a resolution of 1 mm / 30000 mm at a resolution of 1 mm / 30000 mm at a resolution of 0.1 mm)
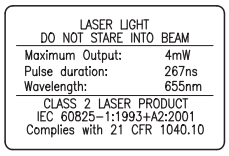
  3. Remote control, ASCII transfer of the measurement value on request:
  4 bytes (measurement distance up to 9900 mm),
  5/6 bytes (measurement distance up to 30000 mm).
- The enclosed laser warning signs must be attached to the sensor or in its immediate vicinity such that they are well visible.