Part No. 501 09360

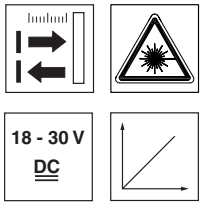

0.2 … 30m

- Reflection-independent distance information
- High accuracy through referencing
- Analogue current and voltage output
- 1 teachable analogue and switching output
- LC display and key pad for configuration
- Measurement value is indicated in mm on LC display
- M12 connector
- Mounting device included

Accessories:

(available separately)

- Ready-made cable K-D M12A-8P-2m-PUR
- Co-operative Target CTS 100x100 (reflectivity 50 … 90%)

Dimensioned drawing

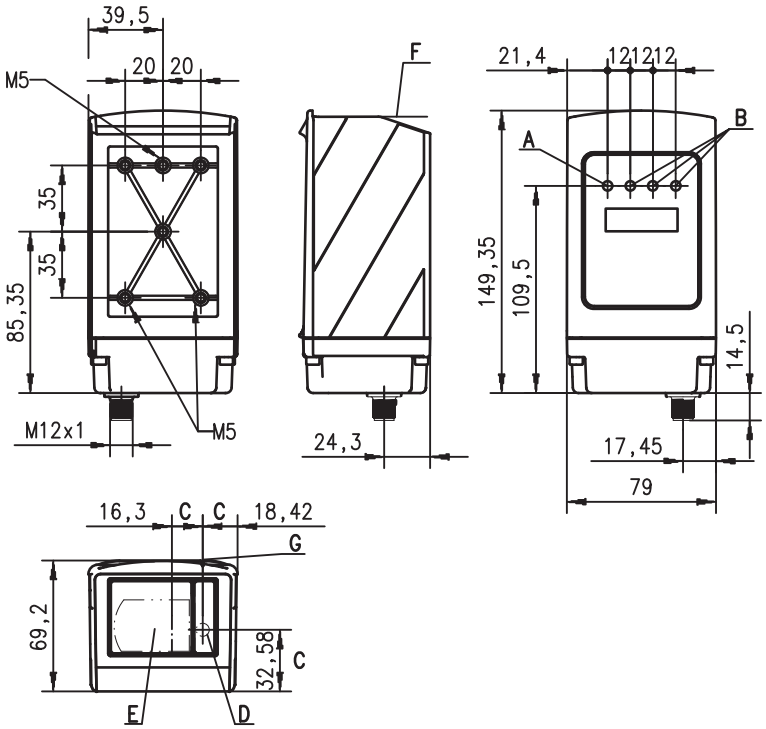

A 1 green indicator diode / ready
B 3 yellow indicator diodes / switching outputs Q1, Q2, Q3
C Optical axes
D Transmitter
E Receiver
F Reference edge for the measurement (distance zero point)
G Sight for coarse alignment

Electrical connection

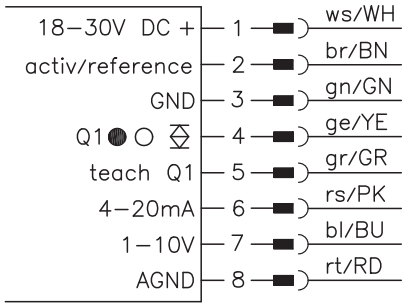

We reserve the right to make changes • ods_13gb.fm

Specifications

Optical data

Measurement range [1]	0.2 … 30m (adjustable)
Resolution [2]	0.1mm/1mm (factory setting)
Light source	laser
Wavelength	650nm (visible red light)
Light spot	divergent, ∅ 6mm at 10m
Laser warning notice	see remarks

Error limits for current output, relative to measurement range end value [3]

Absolute measurement accuracy [1]	measurement range up to 2.5m: ± 2% without referencing, ± 1% with referencing measurement range 2.5m up to 5m: ± 1.5% without referencing, ± 1% with referencing measurement range 5m up to 30m: ± 1% without referencing, ± 1% with referencing
Repeatability [4]	± 0.5% of measurement value
Temperature drift	typ. 0.5mm/°C (without referencing)

Timing

Measurement time [5]	30 … 100ms (factory setting: 100ms)
Delay before start-up	≤ 1s

Electrical data

Operating voltage U_B	18 … 30VDC (incl. residual ripple)
Residual ripple	≤ 15% of U_B
Power consumption	≤ 4W
Switching output	PNP transistor, HIGH active (default), NPN transistor or push-pull through configuration
Signal voltage high/low	≥ (U_B-2 V)/≤ 2V
Analogue output	R_L ≥ 2kΩ (voltage) R_L ≤ 500Ω (current)

Indicators

Green LED	continuous light	ready
	off	no voltage
Yellow LED	continuous light	object inside teach-in measurement distance
	off	object outside teach-in measurement distance

Mechanical data

Housing	metal
Optics cover	glass
Weight	650g
Connection type	M12 connector, 8-pin

Environmental data

Ambient temp. (operation/storage)	-10°C … +45°C / -40°C … +70°C
Protective circuit [6]	2, 3
VDE safety class [7]	II, all-insulated
Protection class	IP 67
Laser class	2 (acc. to EN 60825-1)
Standards applied	IEC 60947-5-2

1) Luminosity coefficient 6% … 90%, temperature range 0°C … +45°C
2) Display and output resolution 0.1mm configurable
3) In the temperature range of 0°C … +45°C, measurement object ≥ 50x50mm²;
at temperatures < 0°C different error limits apply
4) Same object, identical environmental conditions
5) Configurable, depends on the reflectivity of the object and on the max. detection range
6) 2=polarity reversal protection, 3=short-circuit protection for all outputs
7) Rating voltage 250VAC

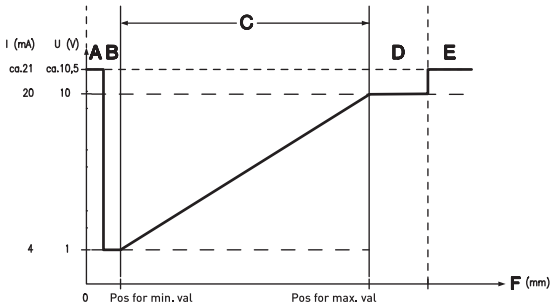

A Short range (no signal)
B Object present
C Measurement range
D Object present
E No object present (no signal)
F Measurement distance

Order guide

	Designation	Part No.
M12 connector	ODSL 30/V-30M-S12	500 39447

Remarks
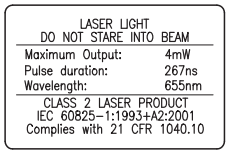
- **Measurement time:** configurable, depends on the reflectivity of the object and on the measurement mode.
- **Teaching procedure (factory setting):** Position measurement object at the desired measurement distance. Apply +U_B to the teach input. Take teach input back to GND, switching output has now been taught.
  Edge on line **teach Q1** teaches output Q1.
  During the teaching of Q1, yellow LED Q1 will flash.
- **Activation/referencing input:** Referencing is carried out by applying the voltage (for a duration of about 300ms).
  If this process is activated before the measurement, the highest possible accuracy is achieved.
- The enclosed laser warning signs must be attached to the sensor or in its immediate vicinity such that they are well visible.
- **Approved purpose**: The ODSL 30 distance sensors are optical electronic sensors for the optical, contactless measurement of distance to objects.