Part No. 501 09361

0.2 … 30 m

10 - 30 V DC

- Reflection-independent distance information
- High accuracy through referencing
- 3 teachable switching outputs
- LC display and key pad for configuration
- Measurement value is indicated in mm on LC display
- M12 connector
- Mounting device included

IEC 60947... IEC 60947... IP 67

Accessories:

(available separately)

- Ready-made cable K-D M12A-8P-2m-PUR
- Co-operative Target CTS 100x100 (reflectivity 50 … 90%)

Dimensioned drawing

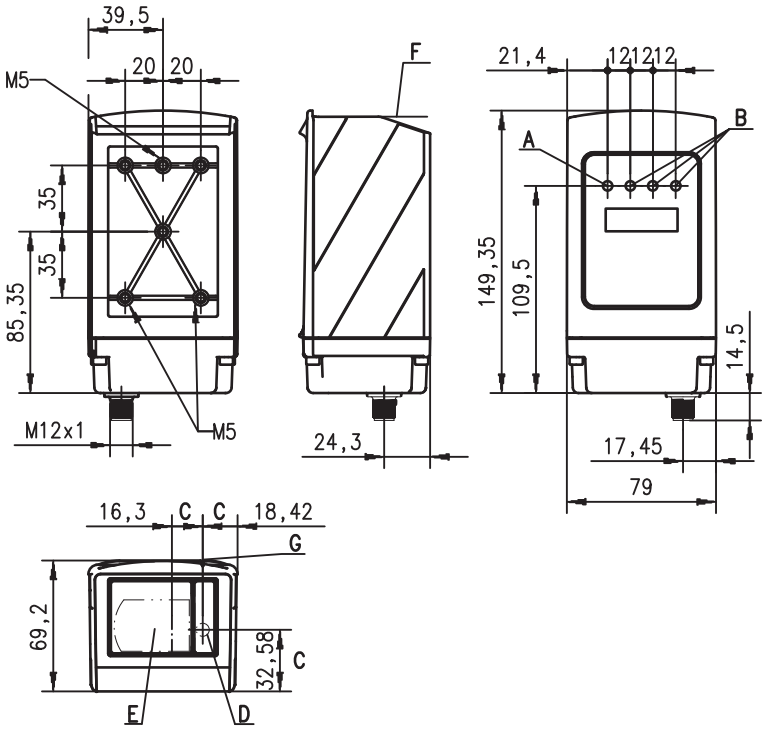

A 1 green indicator diode / ready
B 3 yellow indicator diodes / switching outputs Q1, Q2, Q3
C Optical axes
D Transmitter
E Receiver
F Reference edge for the measurement (distance zero point)
G Sight for coarse alignment

Electrical connection

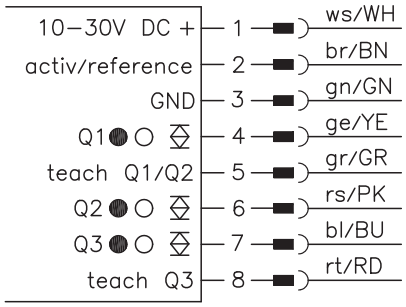

We reserve the right to make changes • ods_19gb.fm

Specifications

Optical data	
Measurement range [1]	0.2 … 30m
Resolution [2]	0.1mm/1mm (factory setting)
Light source	laser
Wavelength	650nm (visible red light)
Light spot	divergent, ∅ 6mm at 10m
Laser warning notice	see remarks
Error limits [3]	
Absolute measurement accuracy [1]	± 5mm (6% diffuse reflection) ± 2mm (90% diffuse reflection) after referencing
Repeatability [4]	± 2mm (6 … 90% diffuse reflection)
Temperature drift	typ. 0.5mm/K (without referencing)
Timing	
Measurement time [5]	30 … 100ms (factory setting: 100ms)
Delay before start-up	≤ 1s
Electrical data	
Operating voltage U_B	10 … 30VDC (incl. residual ripple)
Residual ripple	≤ 15% of U_B
Power consumption	≤4W
Switching outputs	PNP transistor, HIGH active (default), NPN transistor or push-pull through configuration
Signal voltage high/low	≥ (U_B-2 V)/≤ 2V
Indicators	
Green LED continuous light	ready
off	no voltage
Yellow LED continuous light	object inside teach-in measurement distance
off	object outside teach-in measurement distance
Mechanical data	
Housing	metal
Optics cover	glass
Weight	650g
Connection type	M12 connector, 8-pin
Environmental data	
Ambient temp. (operation/storage)	-10°C … +45°C / -40°C … +70°C
Protective circuit [6]	2, 3
VDE safety class [7]	II, all-insulated
Protection class	IP 67
Laser class	2 (acc. to EN 60825-1)
Standards applied	IEC 60947-5-2

1) Luminosity coefficient 6% … 90%, temperature range 0°C … +45°C
2) Display resolution 0.1mm configurable
3) In the temperature range of 0°C … +45°C, measurement object ≥ 50x50mm²; at temperatures < 0°C different error limits apply
4) Same object, identical environmental conditions
5) Configurable, depends on the reflectivity of the object and on the max. detection range
6) 2=polarity reversal protection, 3=short-circuit protection for all outputs
7) Rating voltage 250VAC

Output PNP active high

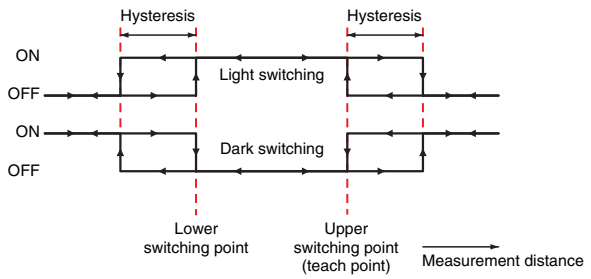

Order guide

	Designation	Part No.
With M12 connector	ODSL 30/24-30M-S12	500 40720

Remarks
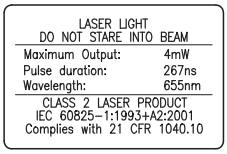
- **Measurement time:** configurable, depends on the reflectivity of the object and on the measurement mode.
- **Teaching procedure: (factory setting):** Position measurement object at the desired measurement distance. Apply +U_B to the teach input. Take teach input back to GND, switching output has now been taught.
  First edge on line **teach Q1/Q2** teaches output Q1, second edge teaches Q2.
  First edge on line **teach Q3** teaches output Q3.
  During the teaching of Q1, the yellow LED Q1 will flash.
  During the teaching of Q2, the yellow LED Q2 will flash.
  During the teaching of Q3, the yellow LED Q3 will flash.
- **Activation/referencing input:** Referencing is carried out by applying the voltage (for a duration of about 300ms).
  If this process is activated before the measurement, the highest possible accuracy is achieved.
- The enclosed laser warning signs must be attached to the sensor or in its immediate vicinity such that they are well visible.
- **Approved purpose**: The ODSL 30 distance sensors are optical electronic sensors for the optical, contactless measurement of distance to objects.