ODSL 30 — Optical laser distance sensors

Part No. 501 08370

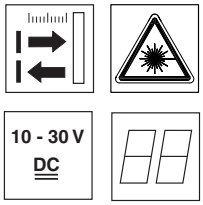

0.2 … 30 m

- Reflection-independent distance information
- High accuracy through referencing
- RS 485 interface
- 2 teachable switching outputs
- LC display and key pad for configuration
- Measurement value is indicated in mm on LC display
- M12 connector
- Mounting device included
- Connection option for a coupling module, e.g. for PROFIBUS

Accessories:

(available separately)

- Ready-made cable K-D M12A-8P-2m-PUR
- Co-operative Target CTS 100x100 (reflectivity 50 … 90%)

Dimensioned drawing

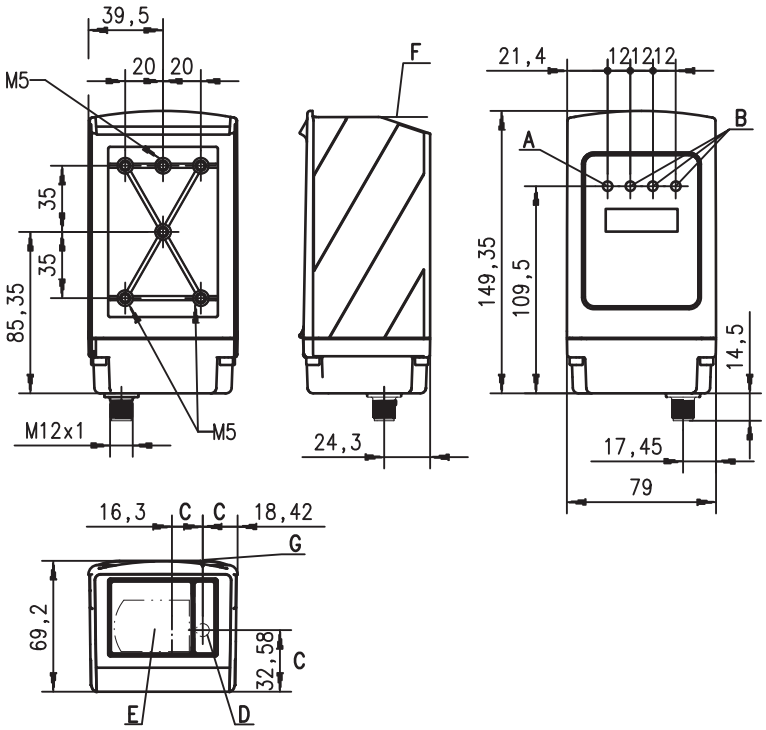

A 1 green indicator diode / ready
B 3 yellow indicator diodes / switching outputs Q1, Q2, Q3
C Optical axes
D Transmitter
E Receiver
F Reference edge for the measurement (distance zero point)
G Sight for coarse alignment

Electrical connection

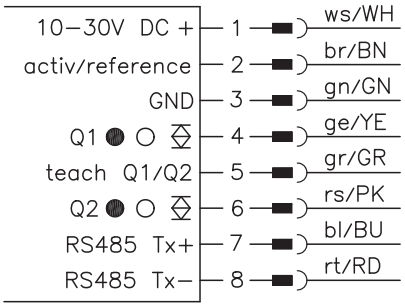

We reserve the right to make changes • ods_14gb.fm

Specifications

Optical data

Measurement range [1)]	0.2 … 30 m [1b)]
Resolution [2)]	0.1 mm/1 mm (factory setting)
Light source	laser
Wavelength	650 nm (visible red light)
Light spot	divergent, ∅ 6 mm at 10 m
Laser warning notice	see remarks

Error limits [3)]

Absolute measurement accuracy [1)]	± 5 mm (6 … 90% diffuse reflection) ± 2 mm (90% diffuse reflection) after referencing
Repeatability [4)]	± 2 mm (6 … 90% diffuse reflection)
Temperature drift	typ. 0.5 mm/°C (without referencing)

Timing

Measurement time [5)]	30 … 100 ms (factory setting: 100 ms)
Delay before start-up	≤ 1 s

Electrical data

Operating voltage U_B	10 … 30 VDC (incl. residual ripple)
Residual ripple	≤ 15% of U_B
Power consumption	≤4 W
Switching outputs	PNP transistor, HIGH active (default), NPN transistor or push-pull through configuration
Signal voltage high/low	≥ (U_B-2 V)/≤ 2 V
Serial interface	RS 485, 9600 Baud, no termination

Indicators

Green LED	continuous light	ready
	off	no voltage
Yellow LED	continuous light	object inside teach-in measurement distance
	off	object outside teach-in measurement distance

Mechanical data

Housing	metal
Optics cover	glass
Weight	650 g
Connection type	M12 connector, 8-pin

Environmental data

Ambient temp. (operation/storage)	-10°C … +45°C / -40°C … +70°C
Protective circuit [6)]	2, 3
VDE safety class [7)]	II, all-insulated
Protection class	IP 67
Laser class	2 (acc. to EN 60825-1)
Standards applied	IEC 60947-5-2

1) Luminosity coefficient 6% … 90%, temperature range 0°C … +45°C
1b) ODSL 30/D… up to 65 m, luminosity coefficient 50% … 90%
2) Display and output resolution 0.1 mm configurable
3) In the temperature range of 0°C … +45°C, measurement object ≥ 50x50 mm²; at temperatures < 0°C different error limits apply
4) Same object, identical environmental conditions
5) Configurable, depends on the reflectivity of the object and on the max. detection range
6) 2=polarity reversal protection, 3=short-circuit protection for all outputs
7) Rating voltage 250 VAC

Approved purpose:

The ODSL 30 distance sensors are optical electronic sensors for the optical, contactless measurement of distance to objects.

Example 1: ASCII transmission of the measurement value

Transmission format: **MMMMM<CR>**

MMMMM = 5-digit measurement value

<CR> = ASCII character "Carriage Return" (x0D)

Example 2: measurement value = 16 Bit

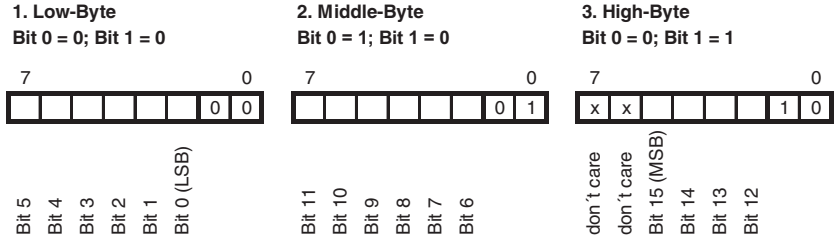

Order guide

	Designation	Part No.
With M12 connector	ODSL 30/D 485-30M-S12	500 41204

Remarks

- **Measurement time:** configurable, depends on the reflectivity of the object and on the measurement mode.
- **Teaching procedure (factory setting):** Position measurement object at the desired measurement distance. Apply +U_B to the teach input. Take teach input back to GND, switching output has now been taught. First edge on line **teach Q1/ Q2** teaches output Q1, second edge teaches Q2. During the teaching of Q1, the yellow LED Q1 will flash. During the teaching of Q2, the green LED and the yellow LED Q2 will flash.
- **Activation/referencing input:** Referencing is carried out by applying the voltage (for a duration of about 300 ms). If this process is activated before the measurement, the highest possible accuracy is achieved.
- Possible protocols for the serial interface, selectable through configuration.
  1. Distance output in ASCII

  2. Measurement value=14/16/ 20 bit (measurement distance up to 15,000 mm at a resolution of 1 mm / 30,000 mm at a resolution of 1 mm / 30,000 mm at a resolution of 0.1 mm)
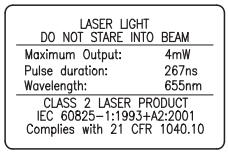
  3. Remote control, ASCII transfer of the measurement value on request (compatible to Bitbus):
  4 bytes (measurement distance up to 9900 mm),
  5/6 bytes (measurement distance up to 30000 mm).
- The enclosed laser warning signs must be attached to the sensor or in its immediate vicinity such that they are well visible.